Control components

CONTROL COMPONENTS

LIMIT SWITCH

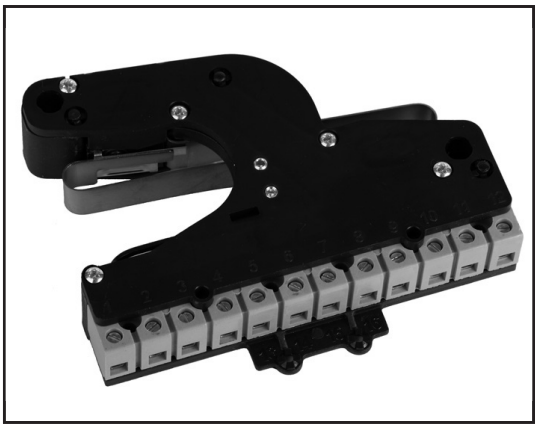

The limit switch is a part of the limit switch system mounted in all motor gearboxes manufactured by De Gier B.V. By means of this limit switch system, the start- and end postion of the driven system can be set.

An operating- and emergency switch is present for both the start- and end position.

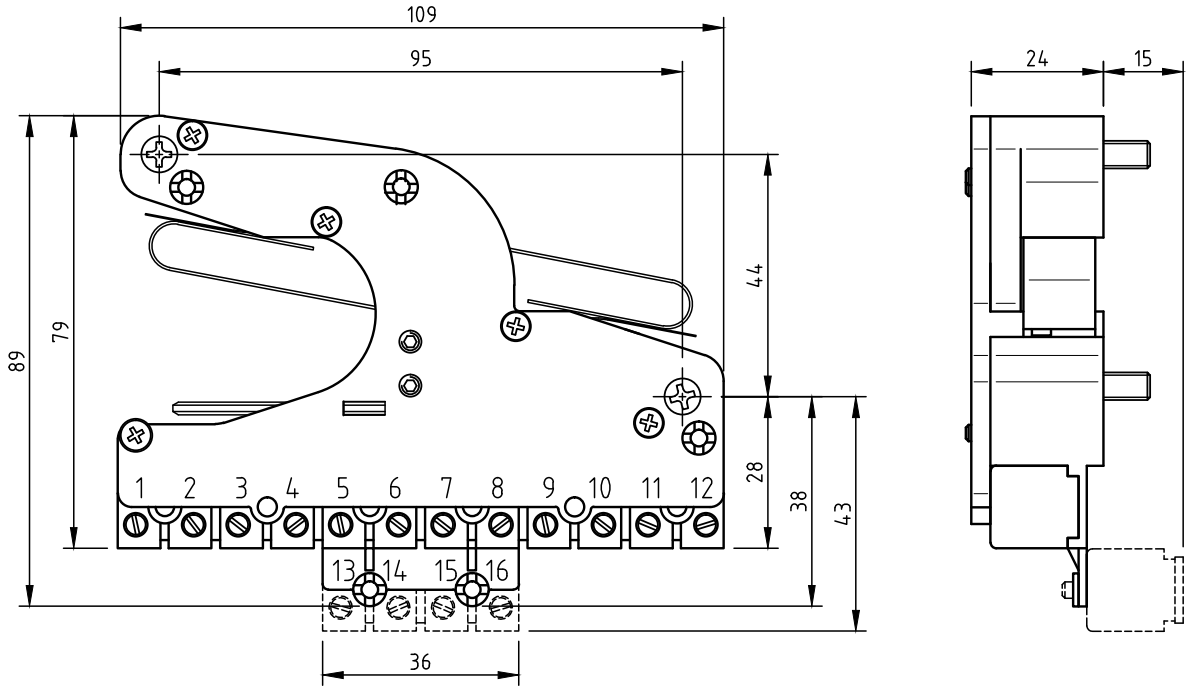

Description	m [g]	Article number
Limit switch	115	P.ENDS.03

The I-DE (Intelligent Digital Encoder) is a multifunctional position encoder, which provides extremely accurate information on the position of the GW gear motor. It is fully electronic and there for not susceptible to humidity, dirt or wear and tear. For this reason, the I-DE is more reliable than a potentiometer. The I-DE has digital and analogue outputs, thereby allowing the encoder to be connected to a wide range of devices and process computers.

This position encoder can easily be mounted in the GW gear motor in the same position as the traditional potentiometer. Or we can install it in the motor gearbox in the factory. A single person can easily calibrate the I-DE

Power supply: 24V AC/DC
Analogue output: 0–20mA / 4-20mA
Digital output: A/B/Z outputs (HTL/TTL/Open collector)

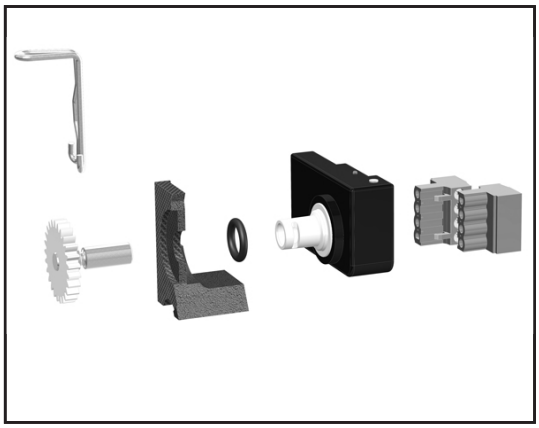

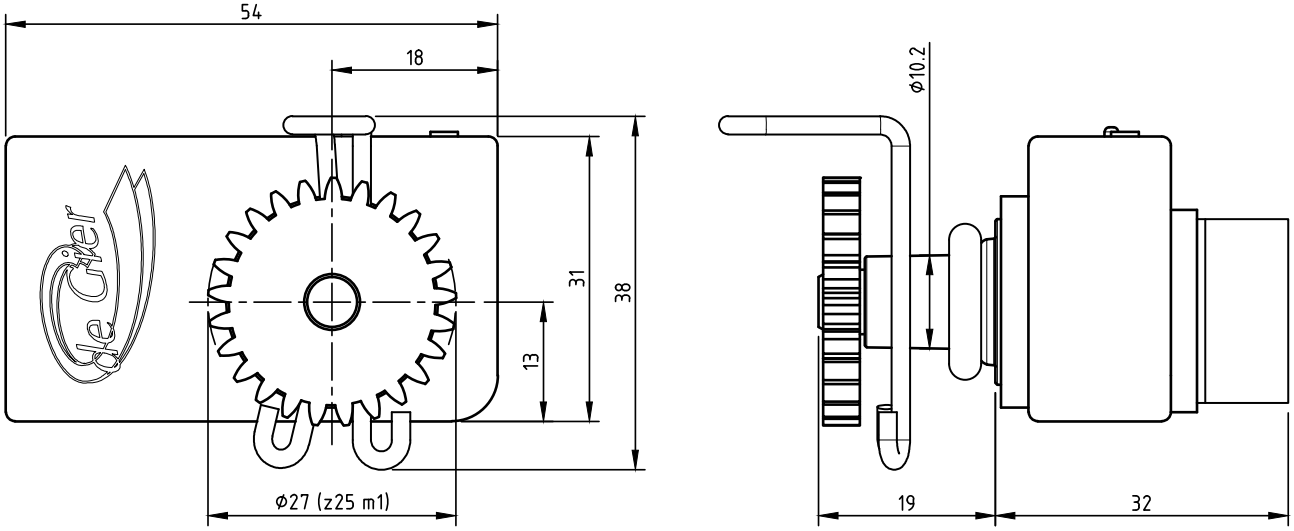

Description	m [g]	Article number
I-DE digital / analogue output 24 V AC/DC	60	P.IDE.024.01

CONTROL COMPONENTS
POTENTIOMETER

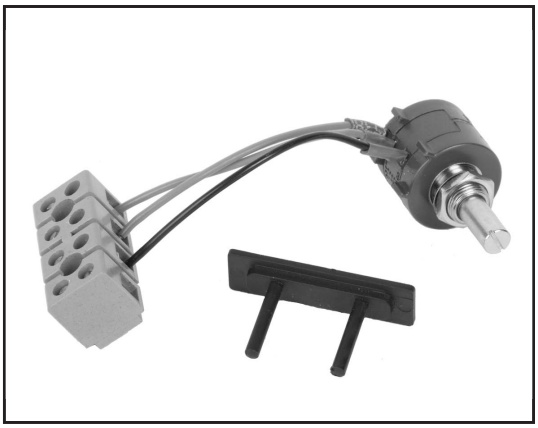

The potentiometer can be built into a GW gearbox and is used for the feedback on the position of the driven system to the control computer.

The 10 turns potentiometers are supplied with a connection block that can be attached below the limitswitch connection block.

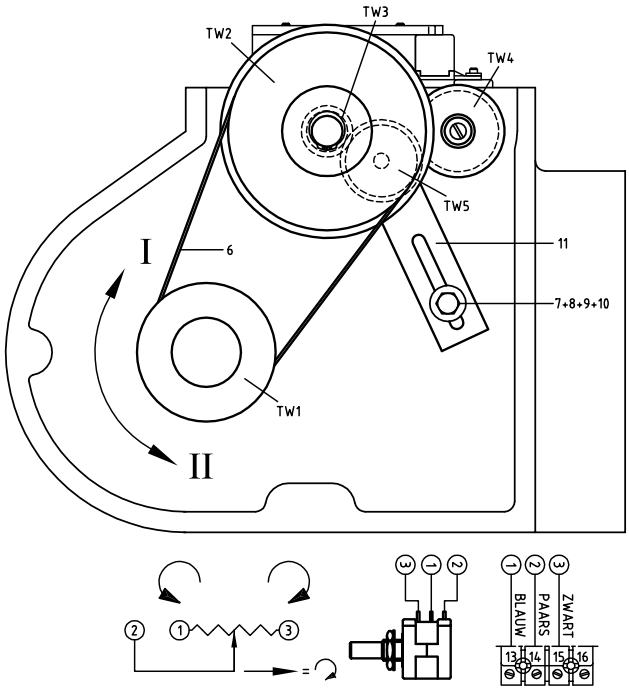

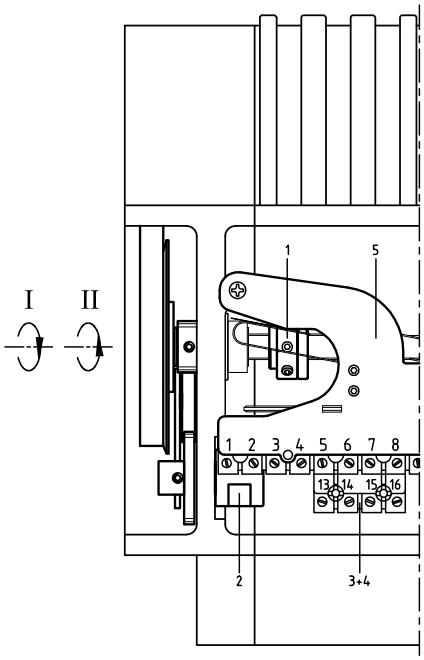

Description	Weerstand [Ω]	Article number
Potentiometer 10 turns 500 Ohm	500	P.PM.500
Potentiometer 10 turns 1000 Ohm	1000	P.PM.1000
Potentiometer 10 turns 2000 Ohm	2000	P.PM.2000
Potentiometer 10 turns 5000 Ohm	5000	P.PM.5000
Potentiometer 10 turns 10000 Ohm	10000	P.PM.10000

The potentiometer set consists of a separate potentiometer and a cog wheel set. Our potentiometers have a range of 10 turns of which 9 are used. During ordering both the article number for a potentiometer and a gear set are required.
For example: GW10 Winch drum, stroke 400 mm and 5kΩ potentiometer → P.PM.TWS.2,34 and P.PM.5000

Type	S [mm]	Article number
GW L Ø 50/Ø 5	200	P.PM.TWS.1,21
GW L Ø 50/Ø 5	250	P.PM.TWS.1,46
GW L Ø 50/Ø 5	280	P.PM.TWS.1,64
GW L Ø 50/Ø 5	350	P.PM.TWS.2,03
GW L Ø 50/Ø 5	400	P.PM.TWS.2,34
GW L Ø 50/Ø 5	440	P.PM.TWS.2,57
GW L Ø 50/Ø 5	480	P.PM.TWS.2,81
GW L Ø 50/Ø 5	550	P.PM.TWS.3,19
GW L Ø 50/Ø 5	580	P.PM.TWS.3,38
GW L Ø 50/Ø 5	640	P.PM.TWS.3,75
GW L Ø 50/Ø 5	680	P.PM.TWS.3,94
GW L Ø 50/Ø 5	745	P.PM.TWS.4,31
GW L Ø 50/Ø 5	770	P.PM.TWS.4,50
GW L Ø 50/Ø 5	840	P.PM.TWS.4,88
GW L Ø 50/Ø 5	870	P.PM.TWS.5,06
GW L Ø 50/Ø 5	940	P.PM.TWS.5,44
GW L Ø 50/Ø 5	970	P.PM.TWS.5,63
GW L Ø 50/Ø 5	1030	P.PM.TWS.6,00
GW L Ø 50/Ø 5	1100	P.PM.TWS.6,38
GW L Ø 50/Ø 5	1130	P.PM.TWS.6,58
GW L Ø 50/Ø 5	1240	P.PM.TWS.7,20
GW L Ø 50/Ø 5	1400	P.PM.TWS.8,16
GW L Ø 50/Ø 5	1490	P.PM.TWS.8,64
GW L Ø 50/Ø 5	1650	P.PM.TWS.9,60
GW L Ø 50/Ø 5	1740	P.PM.TWS.10,08
GW L Ø 50/Ø 5	1900	P.PM.TWS.11,04
GW L Ø 50/Ø 5	1990	P.PM.TWS.11,52
GW L Ø 50/Ø 5	2150	P.PM.TWS.12,48
GW L Ø 50/Ø 5	2230	P.PM.TWS.12,96
GW L Ø 50/Ø 5	2400	P.PM.TWS.13,92
GW L Ø 50/Ø 5	2480	P.PM.TWS.14,40
GW L Ø 50/Ø 5	2650	P.PM.TWS.15,36
GW L Ø 50/Ø 5	2820	P.PM.TWS.16,32
GW L Ø 50/Ø 5	4020	P.PM.TWS.23,31
GW L Ø 50/Ø 5	4700	P.PM.TWS.27,20
GW L Ø 50/Ø 5	5400	P.PM.TWS.31,50
GW L Ø 55/Band L=1 m	500	P.PM.TWS.3,19
GW L Ø 55/Band L=2 m	1500	P.PM.TWS.7,20
TGA10/TGA20	500	P.PM.TWS.3,38
TGA10/TGA20	750	P.PM.TWS.5,06
TGA10/TGA20	1000	P.PM.TWS.7,20
THG25/42/50R/RK	750	P.PM.TWS.23,31
THG25/42/50R/RK	900	P.PM.TWS.27,20
THG25/42/50R/RK	1100	P.PM.TWS.31,50

Type	S [mm]	Article number
THG52R/RK	750	P.PM.TWS.23,31
THG52R/RK	900	P.PM.TWS.27,20
THG52R/RK	1100	P.PM.TWS.31,50
THG75R/RK	750	P.PM.TWS.31,50
THG75R/RK	900	P.PM.TWS.62
THG75R/RK	1100	P.PM.TWS.62
THG10S/SC	750	P.PM.TWS.8,16
THG24S	750	P.PM.TWS.23,31
THG24S	900	P.PM.TWS.23,31
THG49S	750	P.PM.TWS.23,31
THG49S	900	P.PM.TWS.27,20
THG30 THG40 (1:1)	820	P.PM.TWS.6,00
THG30 THG40 (1:1)	880	P.PM.TWS.6,38
THG30 THG40 (1:1)	910	P.PM.TWS.6,58
THG30 THG40 (1:1)	990	P.PM.TWS.7,20
THG30 THG40 (1:1)	1120	P.PM.TWS.8,16
THG30 THG40 (1:1)	1190	P.PM.TWS.8,64
THG30 THG40 (1:1)	1320	P.PM.TWS.9,60
THG30 THG40 (1:1)	1390	P.PM.TWS.10,08
THG30 THG40 (1:1)	1520	P.PM.TWS.11,04
THG30 THG40 (1:1)	1590	P.PM.TWS.11,52
THG30 THG40 (1:1)	1720	P.PM.TWS.12,48
THG30 THG40 (1:1)	1790	P.PM.TWS.12,96
THG30 THG40 (1:1)	1920	P.PM.TWS.13,92
THG30 THG40 (1:1)	1990	P.PM.TWS.14,40
THG30 THG40 (1:1)	2120	P.PM.TWS.15,36
THG30 THG40 (1:1)	2250	P.PM.TWS.16,32
THG30 THG40 (1:1)	3220	P.PM.TWS.23,31
THG30 THG40 (1:1)	3760	P.PM.TWS.27,20
THG30 THG40 (1:1)	4350	P.PM.TWS.31,50
THG30 THG40 (1:1)	4467	P.PM.TWS.62
THG40 (1:1.8) HD	3000 t/m 5000	P.PM.TWS.62
Wire screen Ø 60/Ø 3	3000	P.PM.TWS.15,36
Wire screen Ø 60/Ø 3	3500	P.PM.TWS.23,31
Wire screen Ø 60/Ø 3	4000	P.PM.TWS.23,31
Wire screen Ø 60/Ø 3	4500	P.PM.TWS.23,31
Wire screen Ø 60/Ø 3	5000	P.PM.TWS.27,20
Wire screen Ø 70/Ø 3	3000	P.PM.TWS.13,92
Wire screen Ø 70/Ø 3	3500	P.PM.TWS.15,36
Wire screen Ø 70/Ø 3	4000	P.PM.TWS.23,31
Wire screen Ø 70/Ø 3	4500	P.PM.TWS.23,31
Wire screen Ø 70/Ø 3	5000	P.PM.TWS.23,31

CONTROL COMPONENTS

GXP10 CONNECTING SET

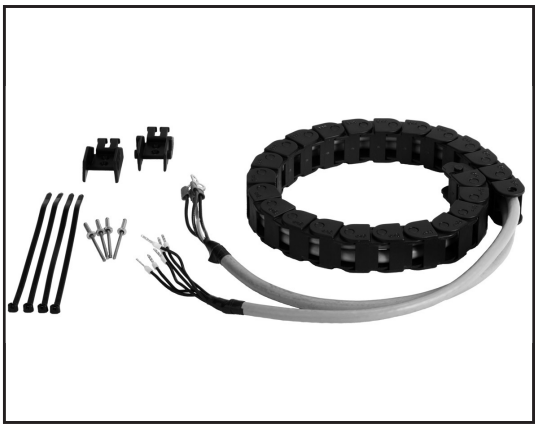

The connecting set for the GXP10 consist of a power cable, a control cable and a protective cable chain with mounting set. This set allows for the GXP10 to run up and down freely without the risk of entangling the cables.

The cable lengths and chain lengths can be freely combined in to the connection set. All cables are supplied with cable sockets and are pre-mounted in the cable chain.

Upon request lengths longer then the standard lengths are available.

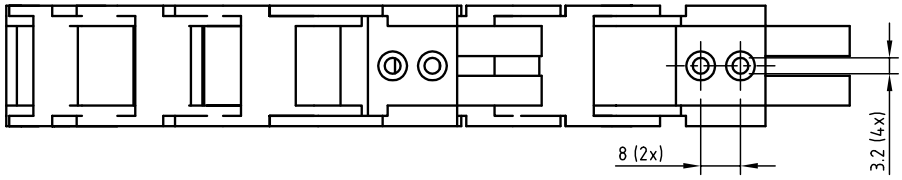

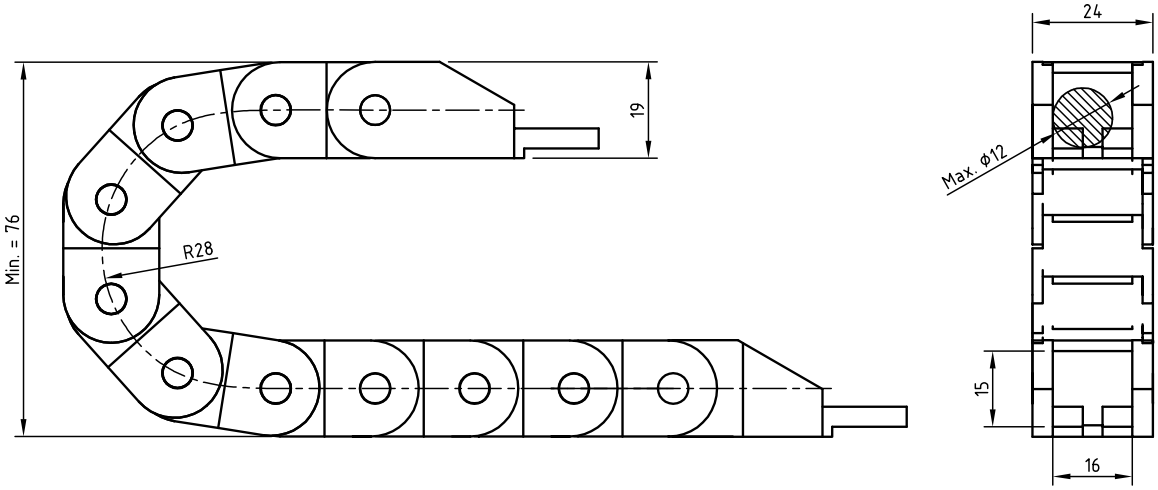

Description	L [m]	Article number
Cable chain 1.5 m with connection set	1.5	P.KRP.15.16.20
Cable chain 2.0 m with connection set	2.0	P.KRP.15.16.25
Cable chain 2.5 m with connection set	2.5	P.KRP.15.16.30
Power cable 4 x 0.75 mm² 2.0 m	2.0	P.KAB.4.075.20
Power cable 4 x 0.75 mm² 2.5 m	2.5	P.KAB.4.075.25
Power cable 4 x 0.75 mm² 3.0 m	3.0	P.KAB.4.075.30
Control cable 7 x 0.5 mm² 2.0 m	2.0	P.KAB.7.05.20
Control cable 7 x 0.5 mm² 2.5 m	2.5	P.KAB.7.05.25
Control cable 7 x 0.5 mm² 3.0 m	3.0	P.KAB.7.05.30

Control boxes

CONTROL COMPONENTS

BLUE CONTROL 100

The BC100 is a compact control box for the GW gearbox. It can function as the link between the climat computer and the gearbox. It can be operated manually by means of the dial on the box or automatically by means of an external 24V signal..

The BC100 is equiped with a motor protection circuit breaker and a connection block for easy connection of the power- and control cables, as well as the limit switch cables.

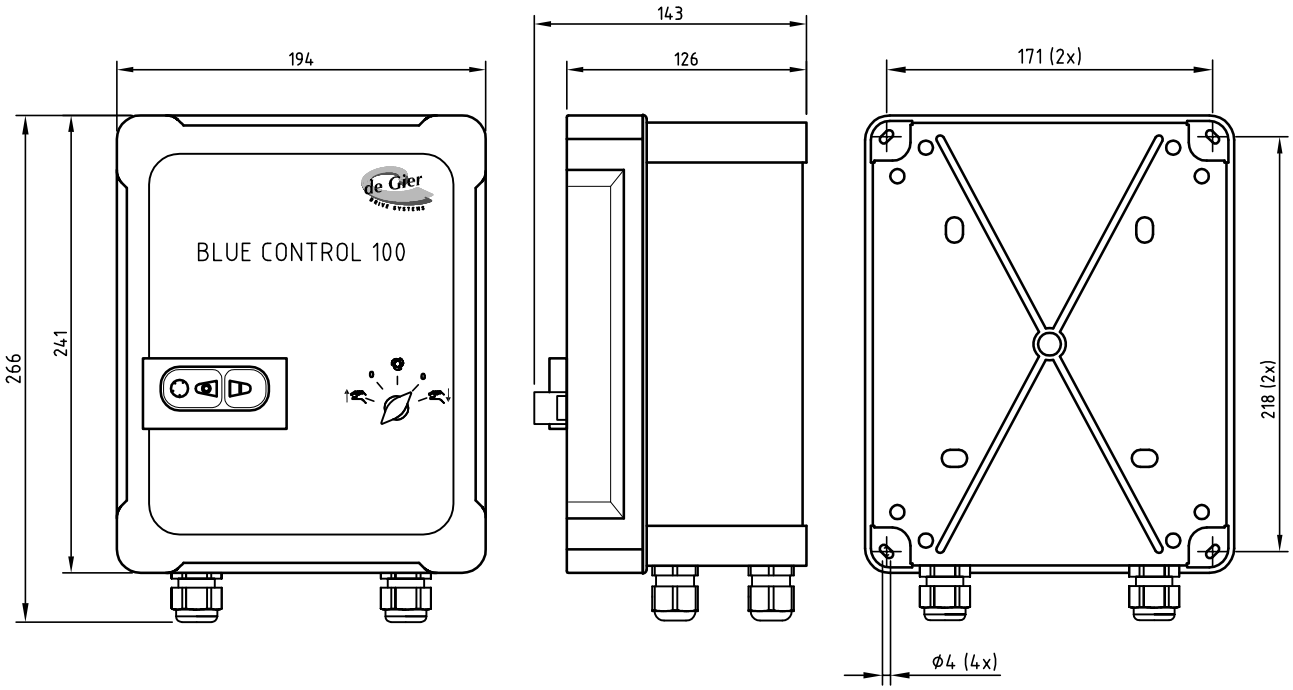

Description	I [A]	m [kg]	Article number 230V 1~	Article number 400V 3~
Motor control box 0.4 - 0.6 A	0.4 - 0.6	2.8	P.BC100.2301.06	P.BC100.4003.06
Motor control box 0.6 - 1.0 A	0.6 - 1.0	2.8	P.BC100.2301.10	P.BC100.4003.10
Motor control box 1.0 - 1.6 A	1.0 - 1.6	2.8	P.BC100.2301.16	P.BC100.4003.16
Motor control box 1.6 - 2.5 A	1.6 - 2.5	2.8	P.BC100.2301.25	P.BC100.4003.25
Motor control box 2.5 - 4.0 A	2.5 - 4.0	2.8	P.BC100.2301.40	P.BC100.4003.40
Motor control box 4.0 - 6.3 A	4.0 - 6.3	2.8	P.BC100.2301.63	P.BC100.4003.63

The BC250M is part of the BC250 control system and is the central control box for multiple motor gearboxes. It can be operated manually and by a climate computer. The BC250M makes it possible to start all motor gearboxes simultaneous whilst the BC250S individually stops each motor at its own end position.

All BC250S boxes are connected to the BC250M with a single linked-through 3-phase power cable.

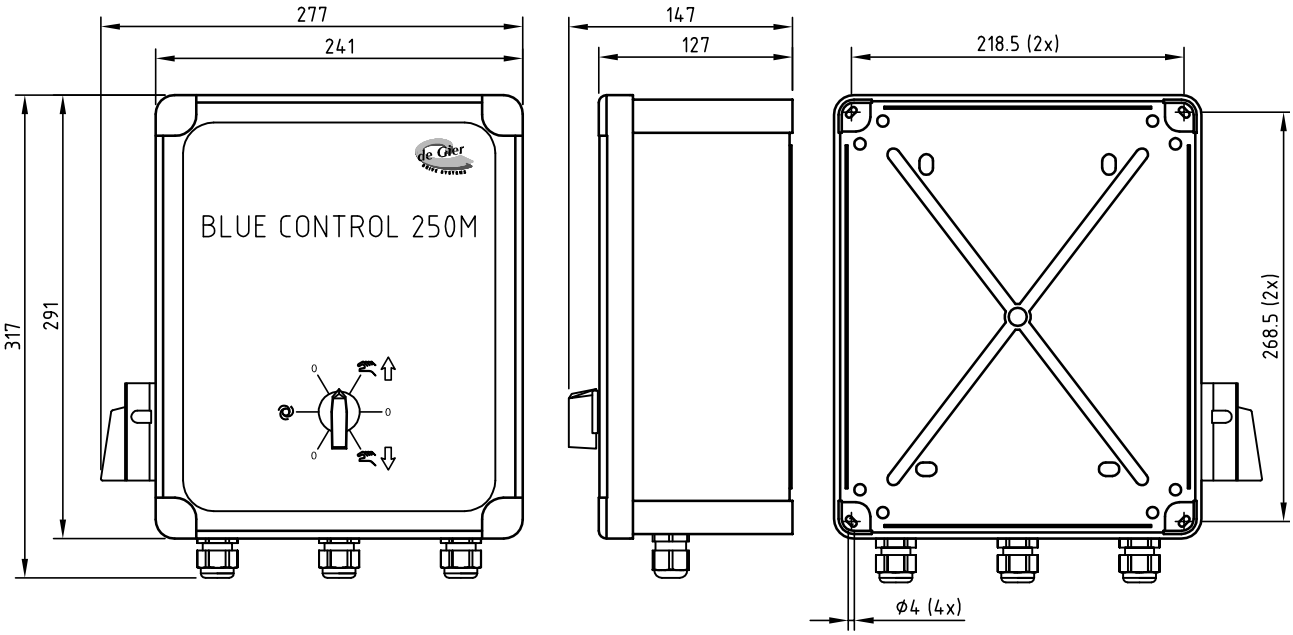

Description	I [A]	m [kg]	Article number
Motor control box (for multiple motors) 10 A	10	2.8	P.BC250M.4003.100
Motor control box (for multiple motors) 25 A	25	2.8	P.BC250M.4003.250

CONTROL COMPONENTS

BLUE CONTROL 250 SLAVE

The BC250S is part of the BC250 control system and takes care of the protection of the individual motor gearbox. The BC250S contains a motor protection circuit breaker and a static reverser. Due to the reverser each gearbox can stop individualy at its own end position, whilst all motors can still be controlled centraly.

The BC250S is connected to the BC250M with only one linked-through 3-phase powercable. The motor gearbox is connected to the BC250S with a 3-phase power cable and a 5-wire cable for the control signal.

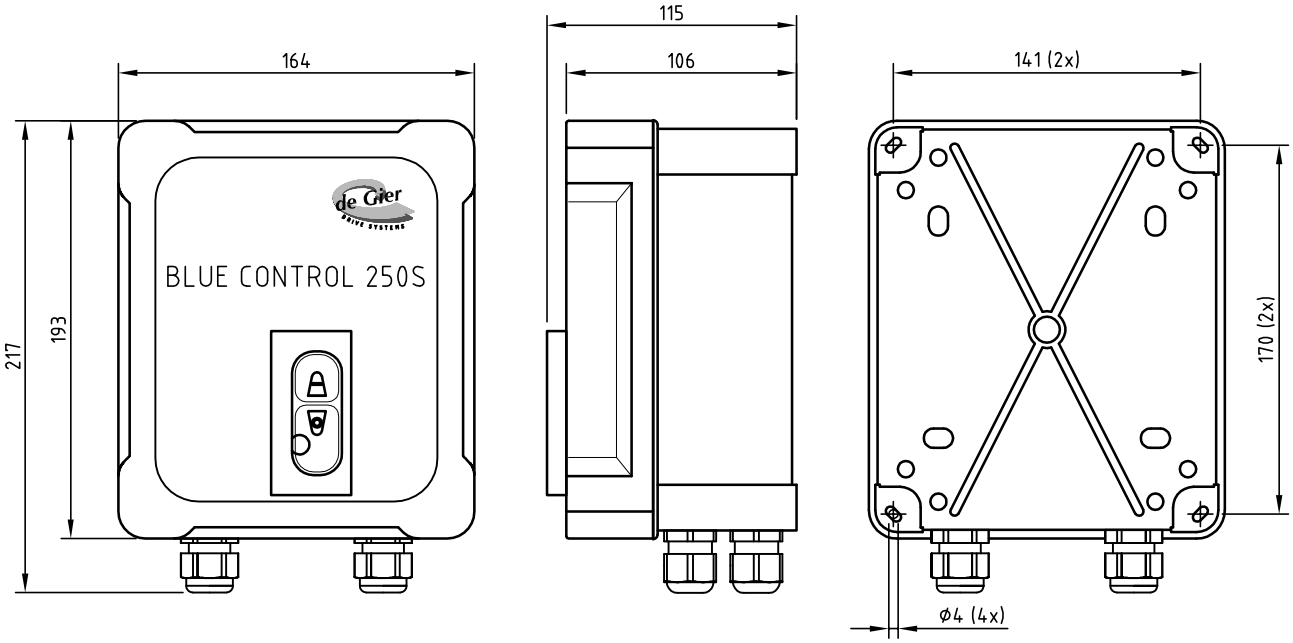

Description	I [A]	m [kg]	Article number
Motor control box (individual) 1.0 - 1.6 A	1.0 - 1.6	1.4	P.BC250S.4003.16
Motor control box (individual) 1.6 - 2.5 A	1.6 - 2.5	1.4	P.BC250S.4003.25

The BC350 is a control box which can operate two or three sections of side screen. The control box is disigned for the GXP10 gearbox and will be installed on one 1-phase power and one control cable. The BC350 can be used for replacing existing 1- phase side-screen systems or in new projects.
The controlbox makes it possible to control the bottom screen independent of the other side-screens.

The integrated frequency controllers make it possible to connect the controlbox to a 1-phase power supply tut still control 3-phase motor gearboxes.

As an option the BC350 can also be conected with a 3 phase power cable and a 0 cable.

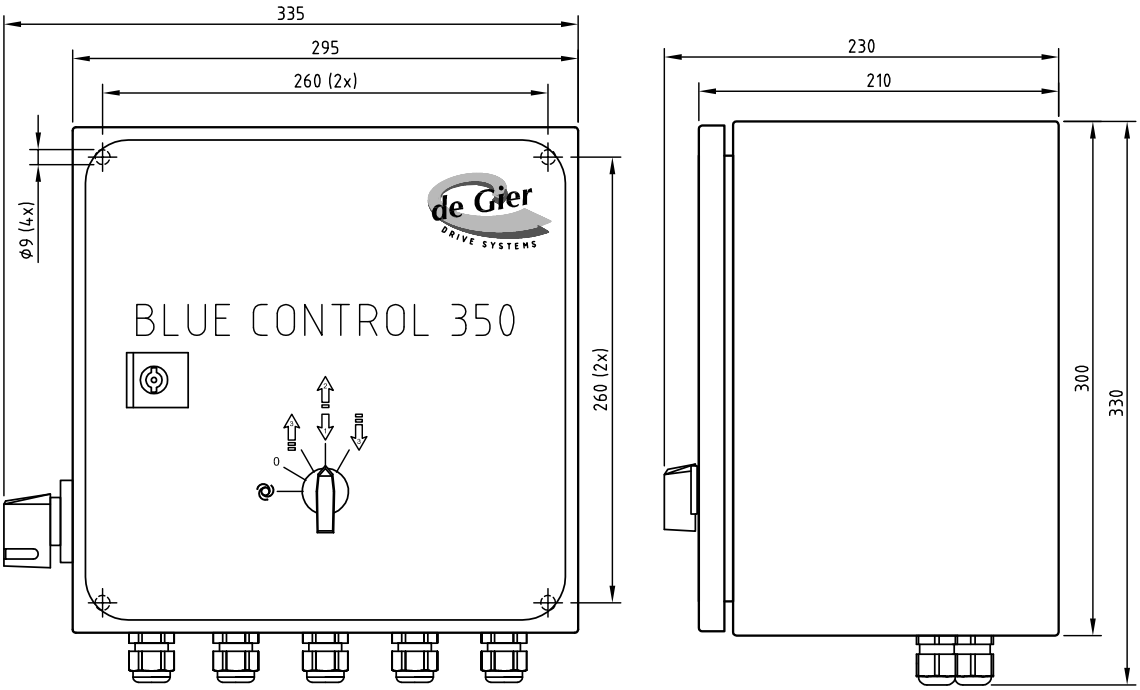

Description	U [V]	I [A]	m [kg]	Article number
Motor control box for 2 GXP's	230	2 x 1.4	7.5	P.BC350.2301.2.14
Motor control box for 3 GXP's	230	3 x 1.4	8.2	P.BC350.2301.3.14